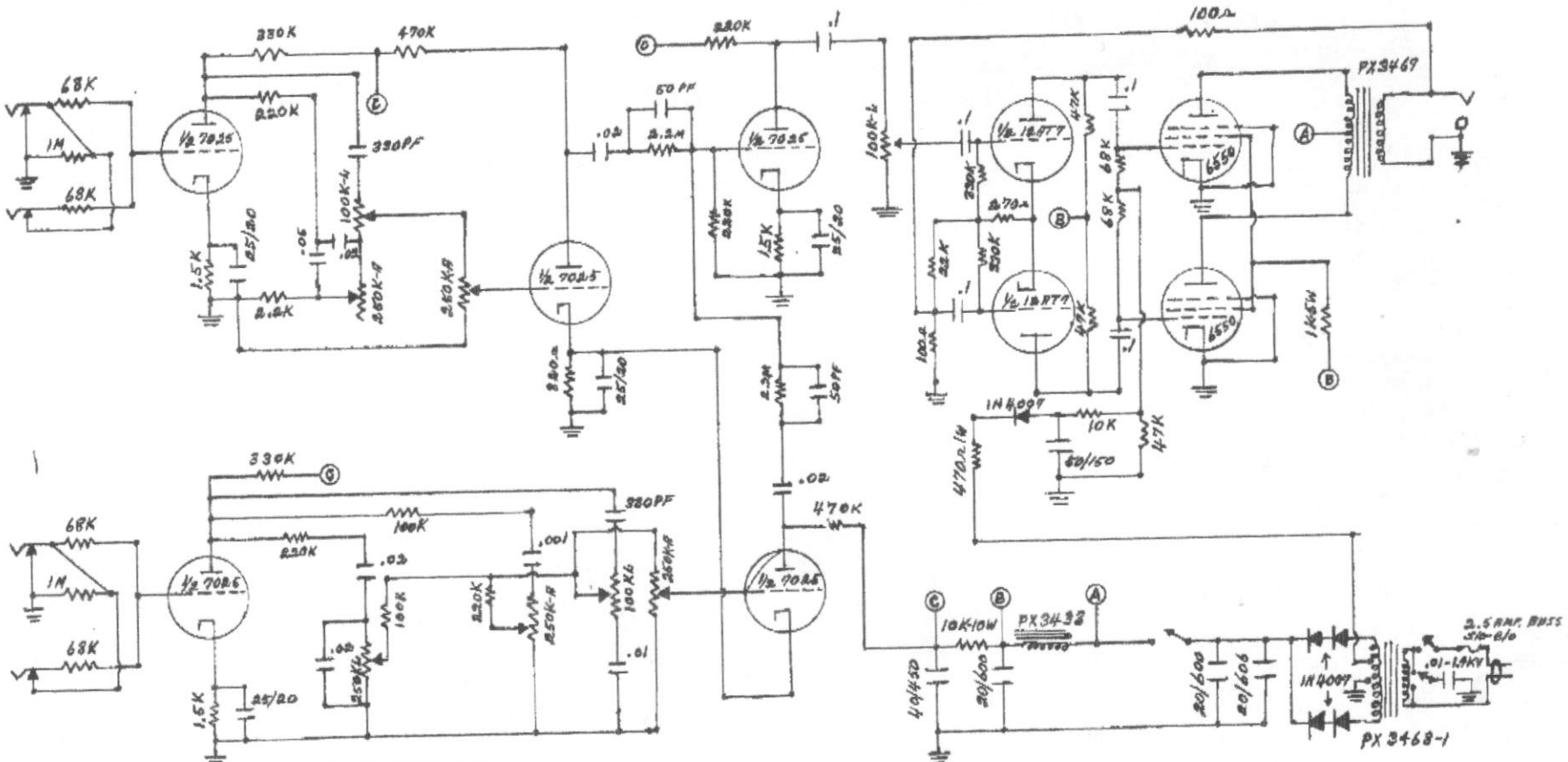

AIMS AMPLIFIERS, INC.
PHOENIX, ARIZONA 85017
MODEL VTB-120 DTD. 4/1/72
UNLESS OTHERWISE SPECIFIED:
ALL CAPACITORS 600V
ALL RESISTORS 10% ½ WATT
ALL DIODES 1000 PIV 1 AMP