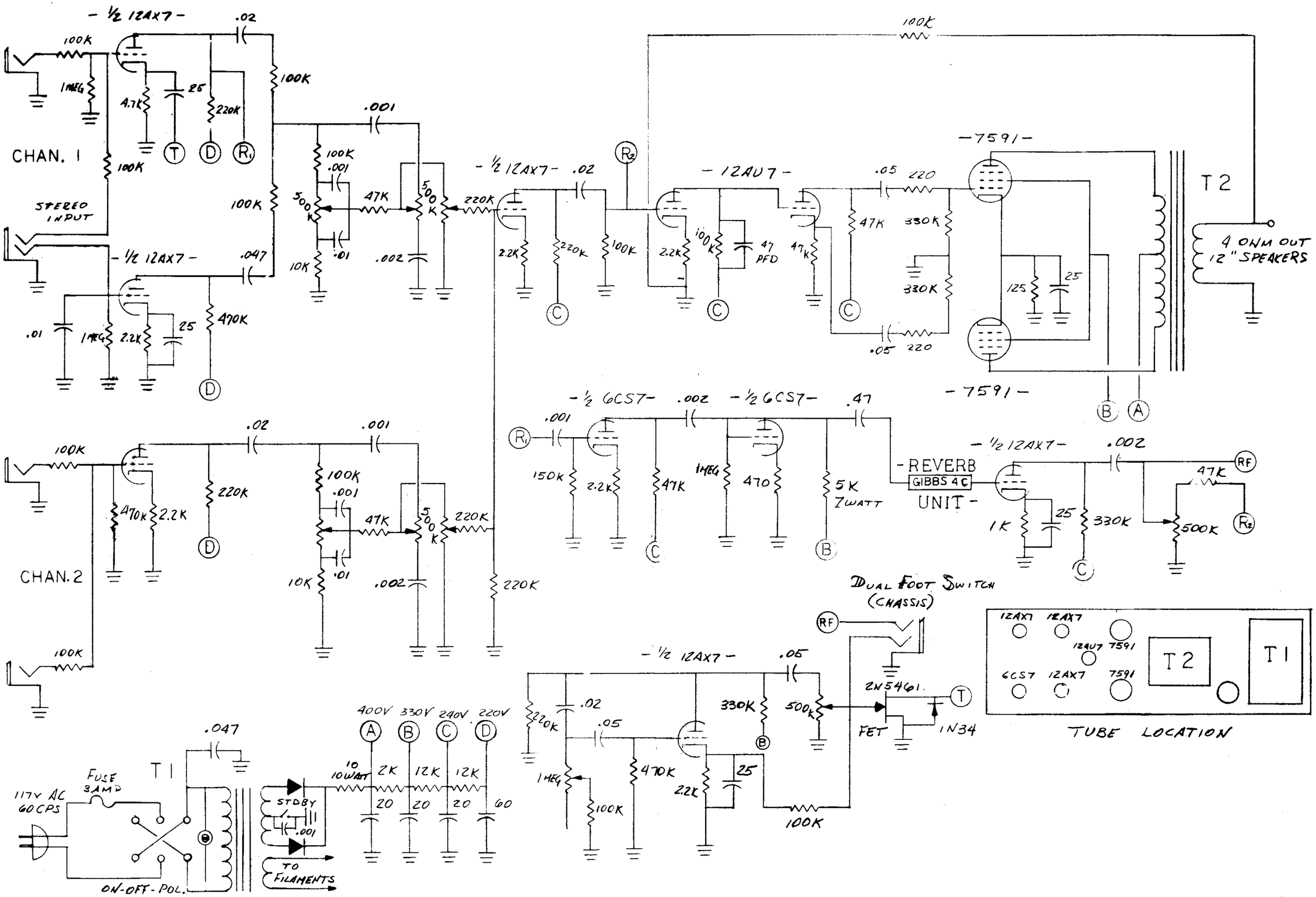

Sano MODEL 250