CIRCUIT DIAGRAM. MODEL T2.U.

Selmer

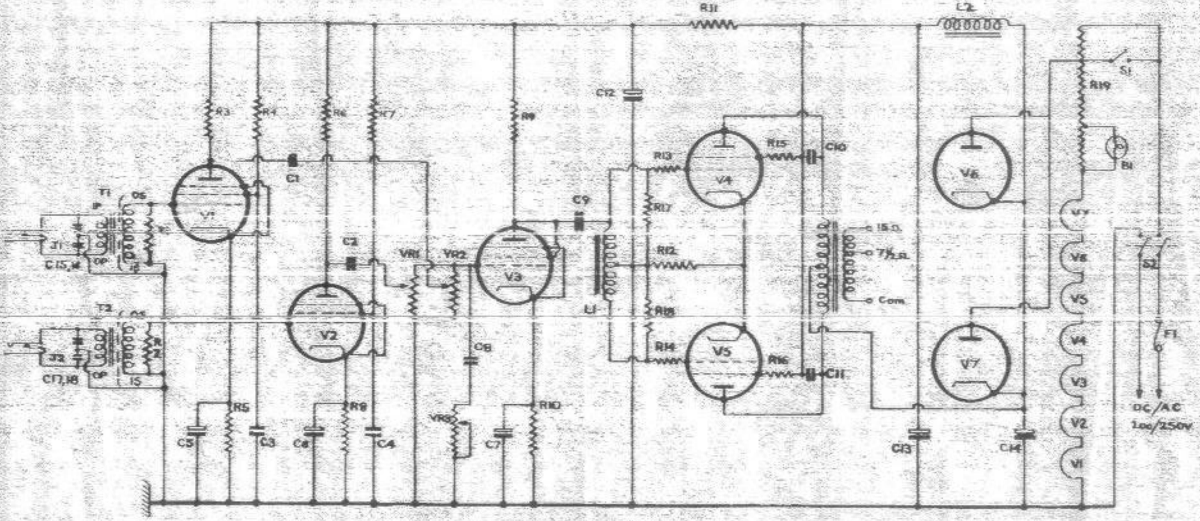

R11
L2
S1
R19
B1
C12
R3
R4
R6
R7
R9
R15
C10
R13
V4
V6
C1
T1
OS
IP
V1
R1
J1
C15,16
OP
IS
R17
C9
15 Ω
7½ Ω
Com
C2
VR1
VR2
V3
R12
V7
V8
S2
T2
OS
V2
L1
R18
V5
R14
R16
C11
V7
F1
J2
R2
C17,18
OP
IS
C8
R5
R8
R10
VR3
C5
C3
C6
C4
C7
C13
C14
V4
V3
V2
V1
DC/AC
100/250V

R	RESISTORS	R	RESISTORS	R	RESISTORS	C	CONDENSERS	C	CONDENSERS	C	CONDENSERS
1	47MΩ ¼W 10%	9	47KΩ ½W 10%	17	100KΩ ½W 10%	1	·005μF 350V	9	0·1μF 350V	17	·05μF 500V
2	" "	10	500Ω ½W "	18	" " "	2	" "	10	·005μF "	18	" "
3	22MΩ " "	11	10KΩ ½W "	19	60-250-40Ω	3	·06μF "	11	" "		Misc
4	[illegible]	12	[illegible]		[illegible]	4	" "	12	[illegible]	B1	[illegible]
5	1200Ω " "	13	47KΩ ¼W 10%			5	50μF 12V	13	16μF 450V	F1	FUSE 1AMP
6	22MΩ " "	14	" " "	VR1	1MΩ LINEAR	6	" "	14	" "		
7	" " "	15	100Ω " "	VR2	" "	7	" "	15	·05μF 500V		
8	1200Ω " "	16	" " "	VR3	5M "	8	·003μF 500V	16			

DRG NO 1011/2.

REDRAWN 31-10-58

P. T. O.